1. General Description

A: SPECIFICATION

Item	Specification
Swing torque of rod against lever N (kgf, lbf)	3.7 (0.38, 0.84) or less

B: COMPONENT

1. AT SELECT LEVER

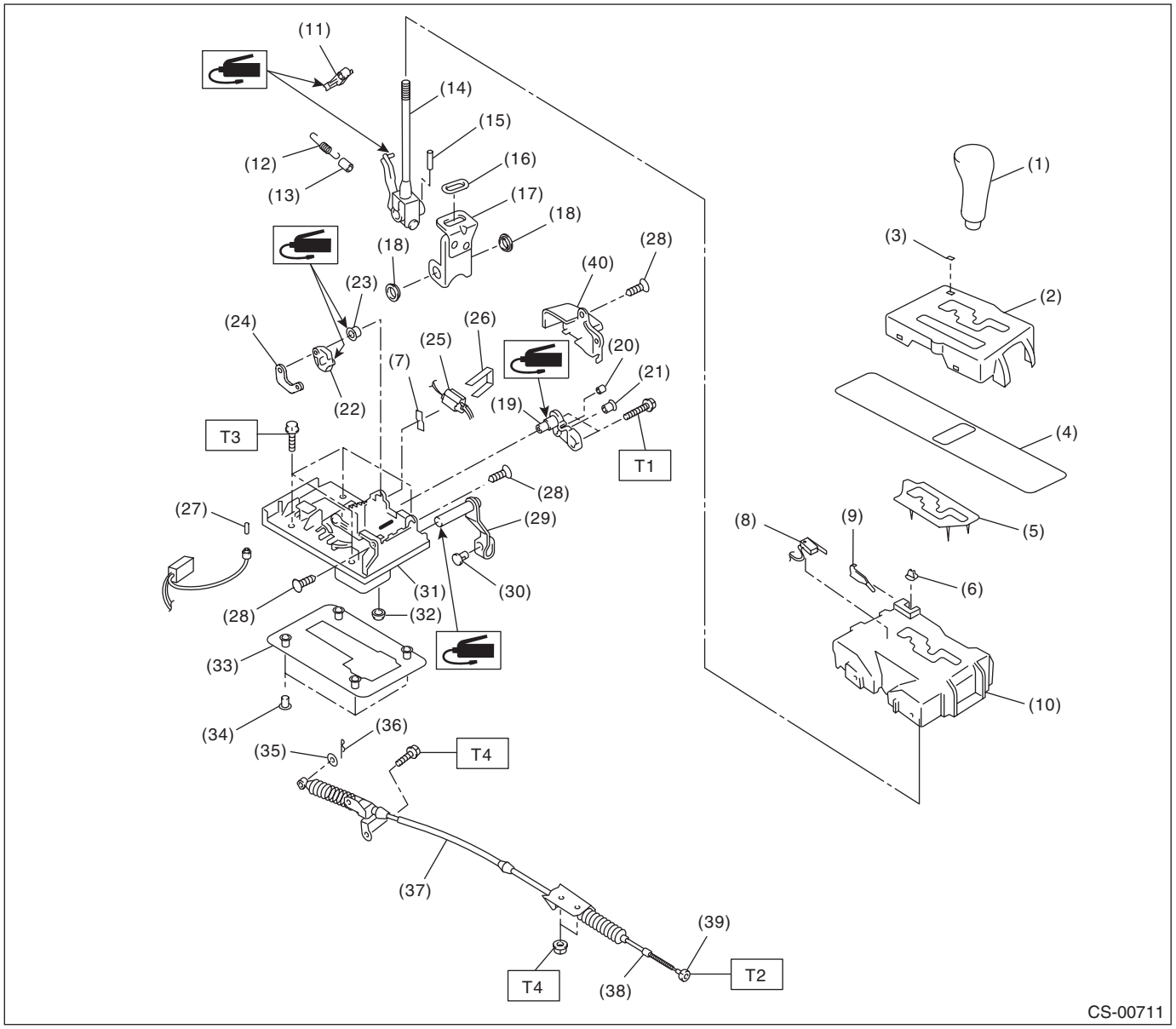

(1) Grip
(2) Indicator cover
(3) Cover
(4) Blind
(5) Cushion
(6) Button
(7) Cushion
(8) P range switch
(9) Spring
(10) Guide plate
(11) Detent arm
(12) Detent spring
(13) Tube
(14) Selector lever COMPL
(15) Spring pin
(16) Bushing
(17) Bracket
(18) Bushing
(19) Lock plate B
(20) Bushing
(21) Bushing
(22) Lock plate A
(23) Bushing
(24) Lock plate C
(25) Shift lock solenoid
(26) Clamp
(27) Indicator bulb
(28) Clip
(29) Select lever arm
(30) Bushing COMPL
(31) Base plate
(32) Grommet
(33) Gasket
(34) Spacer
(35) Washer
(36) Snap pin
(37) Select cable
(38) Adjusting nut B
(39) Adjusting nut A
(40) Cover

Tightening torque:N·m (kgf-m, ft-lb)	
T1:	***2.0 (0.2, 1.4)***
T2:	***7.5 (0.76, 5.5)***
T3:	***13 (1.3, 9.4)***
T4:	***18 (1.8, 13.0)***

2. 5MT GEAR SHIFT LEVER

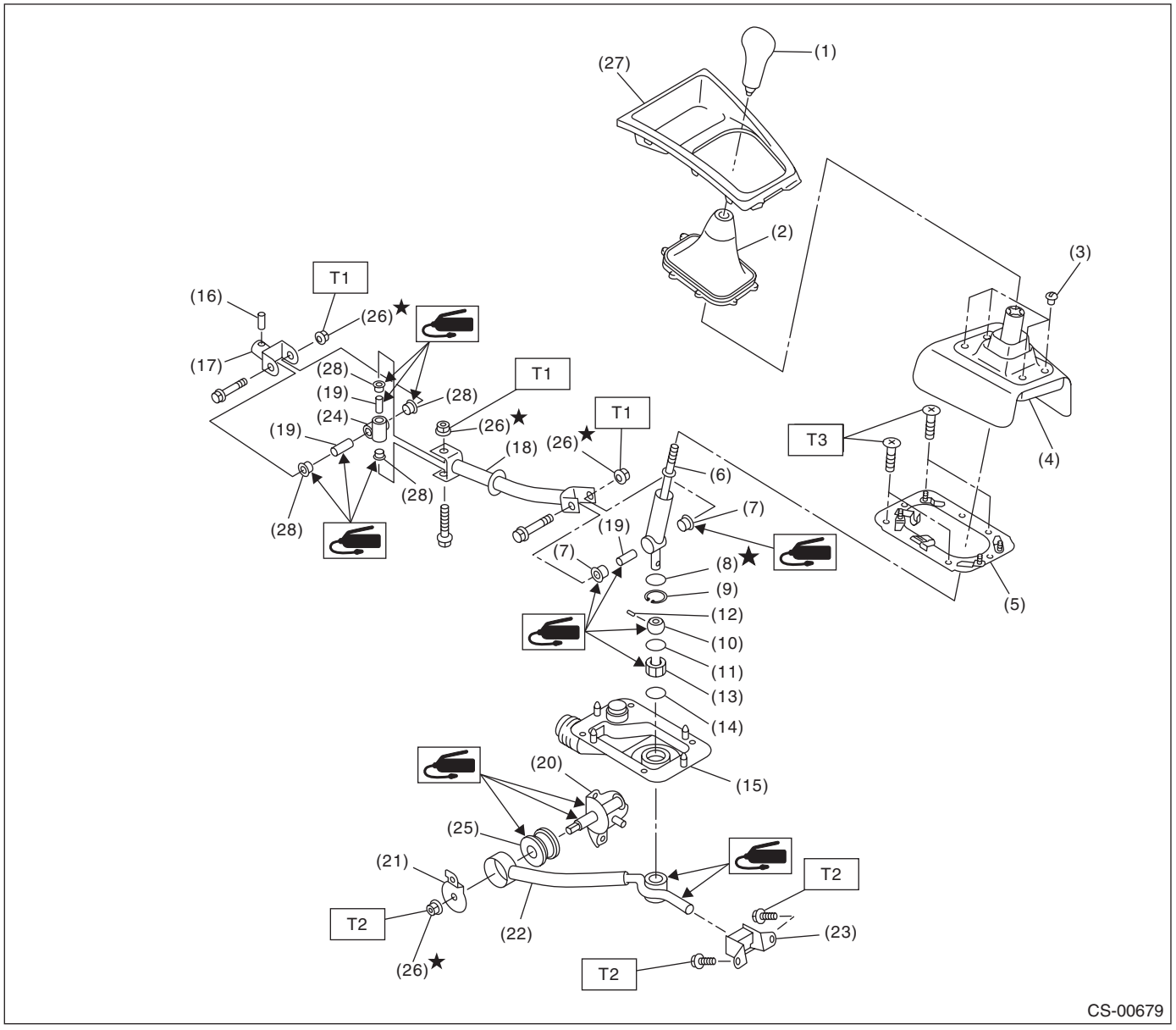

(1)	Gear shift knob	(12)	Spring pin	(23)	Cushion rubber
(2)	Console boot	(13)	Bushing B	(24)	Boss
(3)	Clamp	(14)	O-ring	(25)	Bushing
(4)	Boot and insulator ASSY	(15)	Boot	(26)	Self-locking nut
(5)	Plate ASSY	(16)	Spring pin	(27)	Front cover
(6)	Lever	(17)	Joint	(28)	Bushing
(7)	Bushing	(18)	Rod		
(8)	Lock wire	(19)	Spacer		
(9)	Snap ring	(20)	Bracket		
(10)	Bushing	(21)	Washer		
(11)	O-ring	(22)	Stay		

Tightening torque:N·m (kgf-m, ft-lb)

T1: 12 (1.2, 8.9)
T2: 18 (1.8, 13.0)
T3: 7.5 (0.76, 5.5)

3. 6MT GEAR SHIFT LEVER

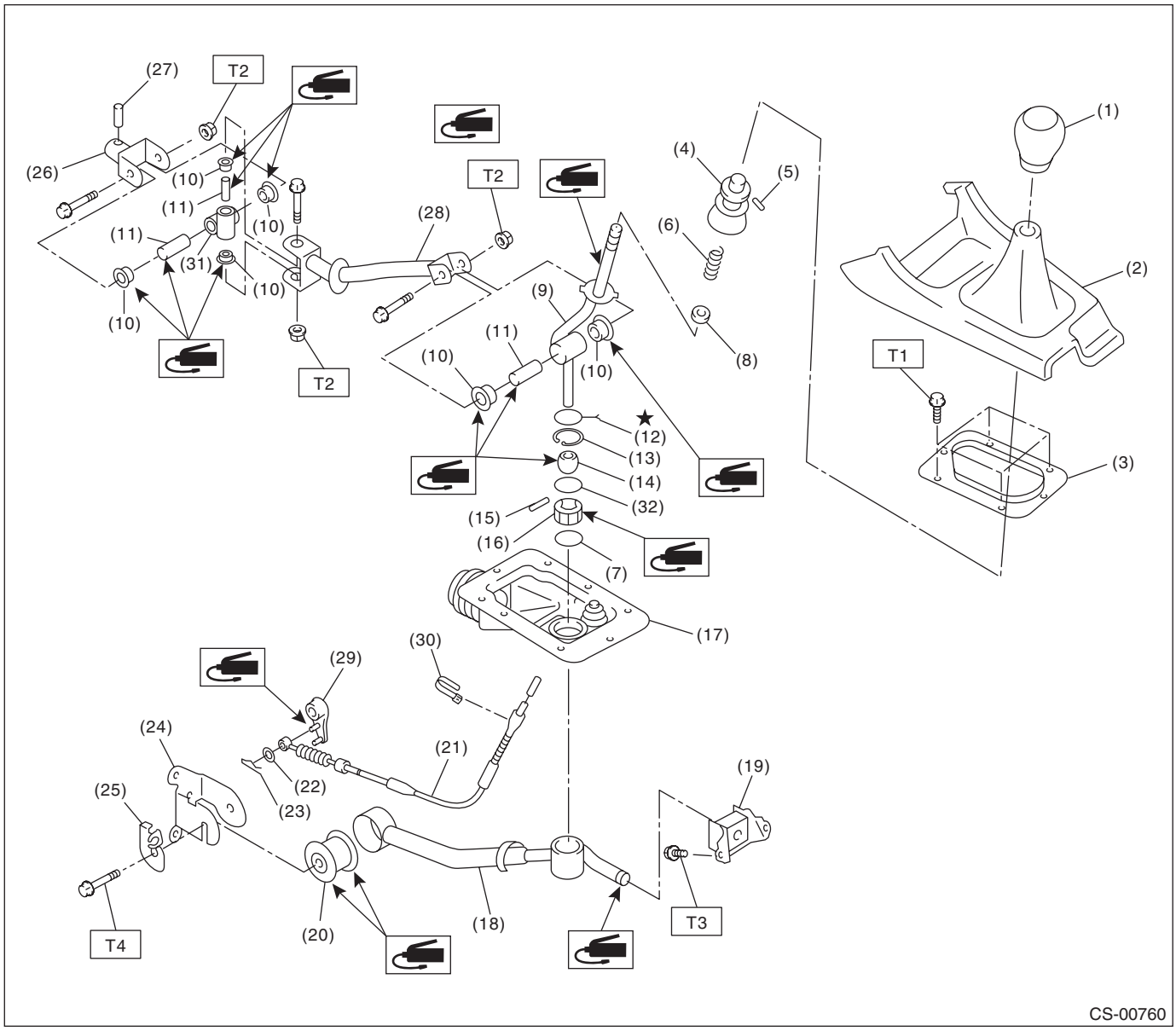

(1)	Gear shift knob	(14)	Bushing	(27)	Spring pin
(2)	Console box front	(15)	Spring pin	(28)	Rod
(3)	Plate	(16)	Bushing	(29)	Reverse check lever
(4)	Slider	(17)	Boot	(30)	Band clip
(5)	Spring pin	(18)	Stay	(31)	Boss
(6)	Spring	(19)	Cushion rubber	(32)	O-ring
(7)	O-ring	(20)	Bushing		
(8)	Seat cushion	(21)	Reverse check cable		
(9)	Lever	(22)	Washer		
(10)	Bushing	(23)	Snap pin		
(11)	Spacer	(24)	Bracket		
(12)	Lock wire	(25)	Cable plate		
(13)	Snap ring	(26)	Joint		

Tightening torque:N·m (kgf-m, ft-lb)

T1: 7.5 (0.76, 5.5)
T2: 11.8 (1.2, 8.7)
T3: 18 (1.8, 13.0)
T4: 32 (3.3, 23.6)

C: CAUTION

- Wear appropriate work clothing, including a cap, protective goggles and protective shoes when performing any work.
- Remove contamination including dirt and corrosion before removal, installation or disassembly.
- Keep the disassembled parts in order and protect them from dust and dirt.
- Before removal, installation or disassembly, be sure to clarify the failure. Avoid unnecessary removal, installation, disassembly and replacement.
- Use SUBARU genuine fluid, grease etc. or equivalent. Do not mix fluid, grease, etc. of different grades or manufacturers.
- Be sure to tighten fasteners including bolts and nuts to the specified torque.
- Place shop jacks or rigid racks at the specified points.
- Apply grease onto sliding or revolving surfaces before installation.
- Before installing O-rings or snap rings, apply sufficient amount of fluid to avoid damage and deformation.
- Before securing a part in a vise, place cushioning material such as wood blocks, aluminum plate or cloth between the part and the vise.
- Before disconnecting electrical connectors, be sure to disconnect the negative terminal from battery.